TILTA CAMERA RIG FOR

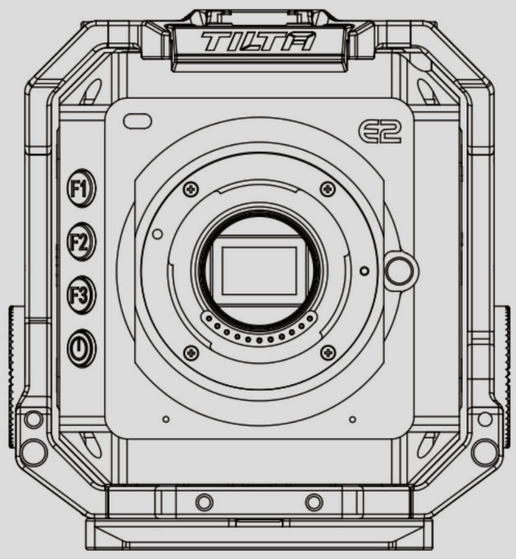

Z-CAM

E2

CAGE | TOP HANDLE | BASEPLATE | ACCESSORIES

1

Install the Z-CAM E2 camera into the cage

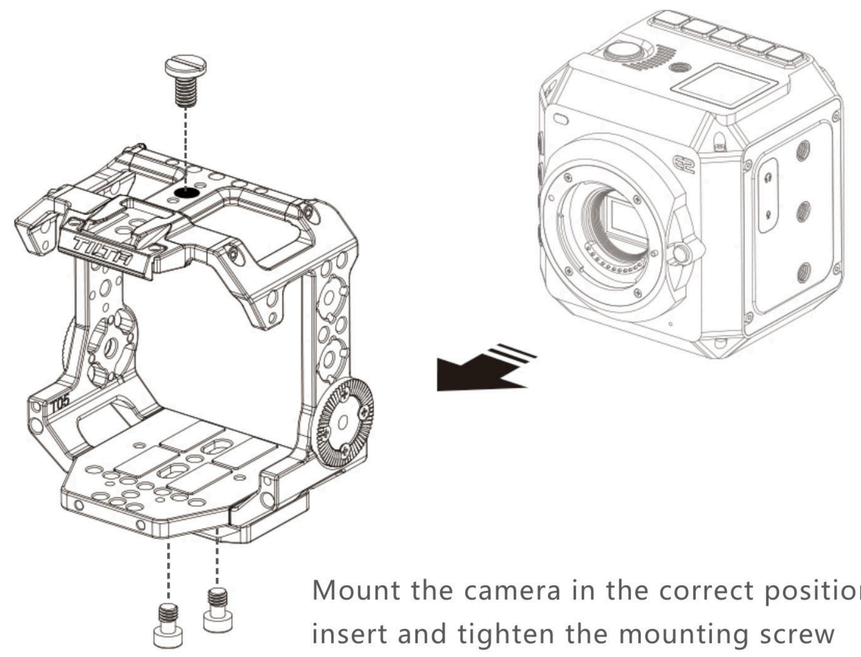

Mount the camera in the correct position and then insert and tighten the mounting screw

2

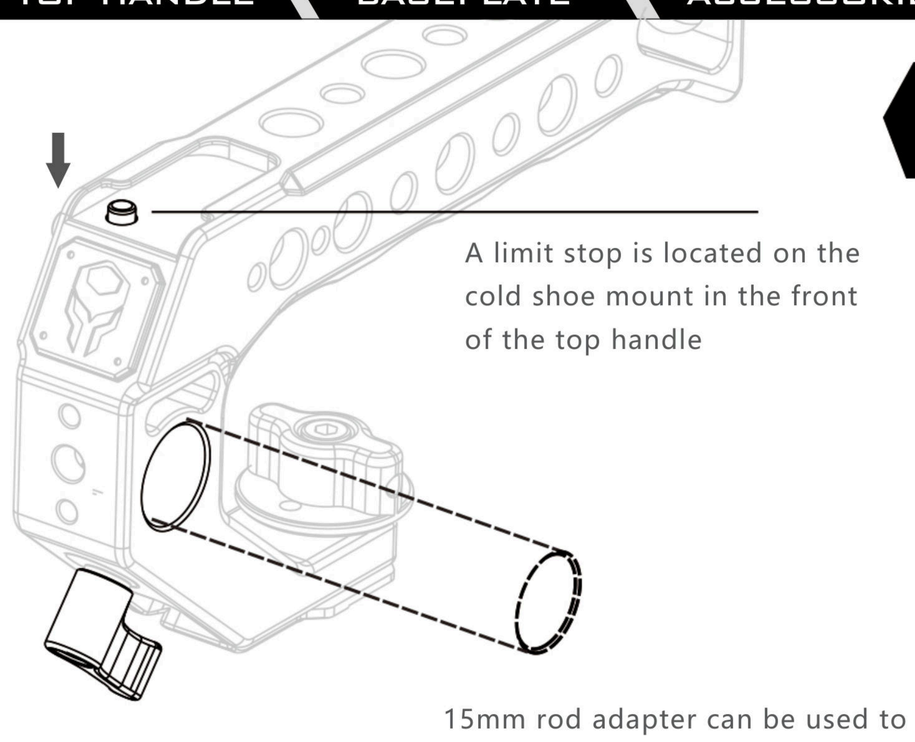

A limit stop is located on the cold shoe mount in the front of the top handle

15mm rod adapter can be used to mount EVFs or other accessories

3

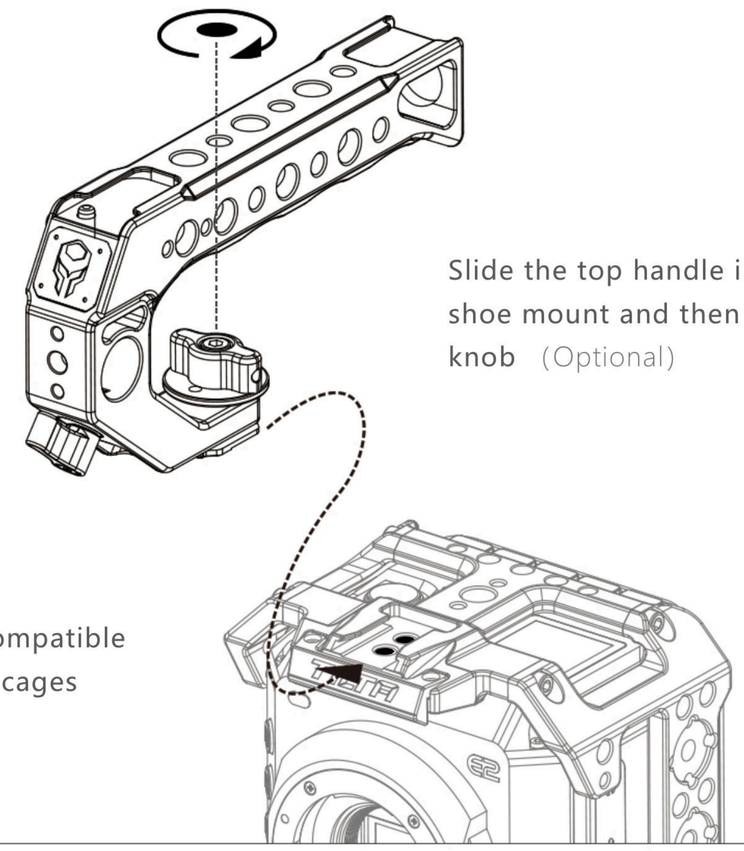

Slide the top handle into the cold shoe mount and then fasten the knob (Optional)

Top handle is compatible with all Tiltaing cages

4

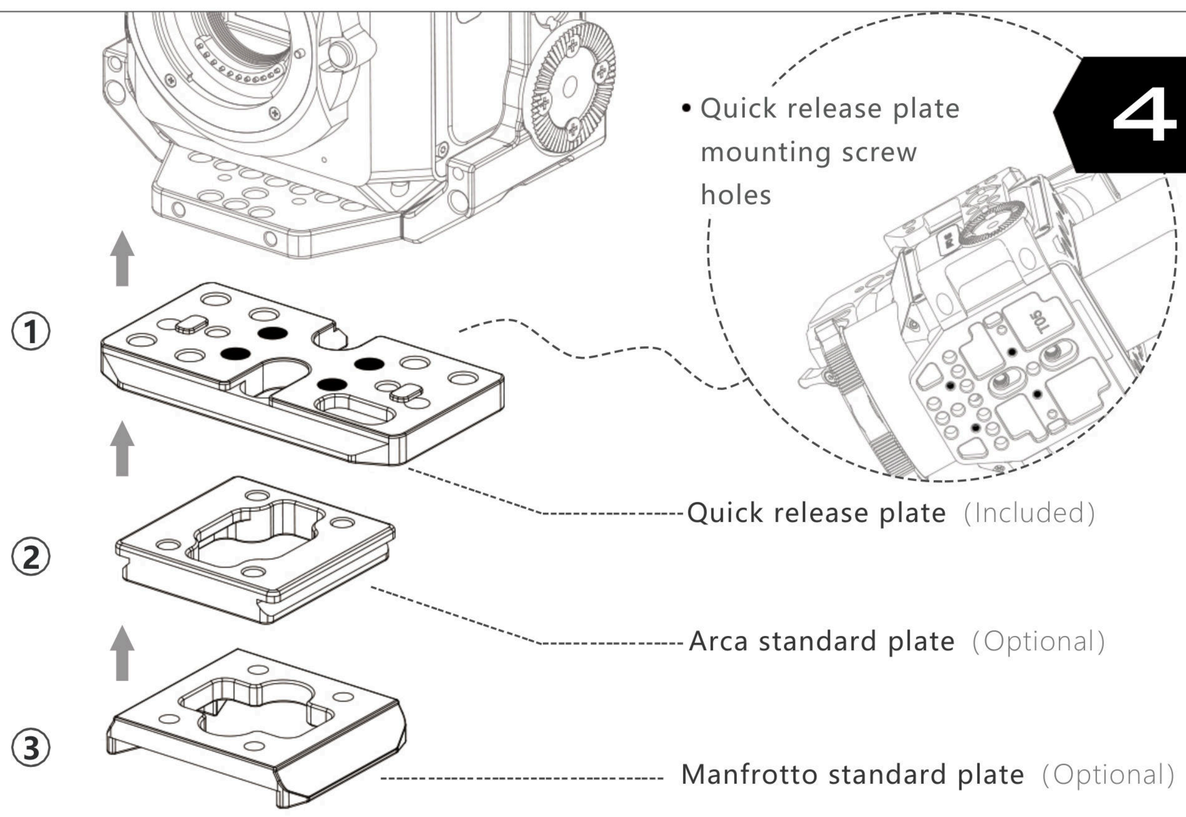

5

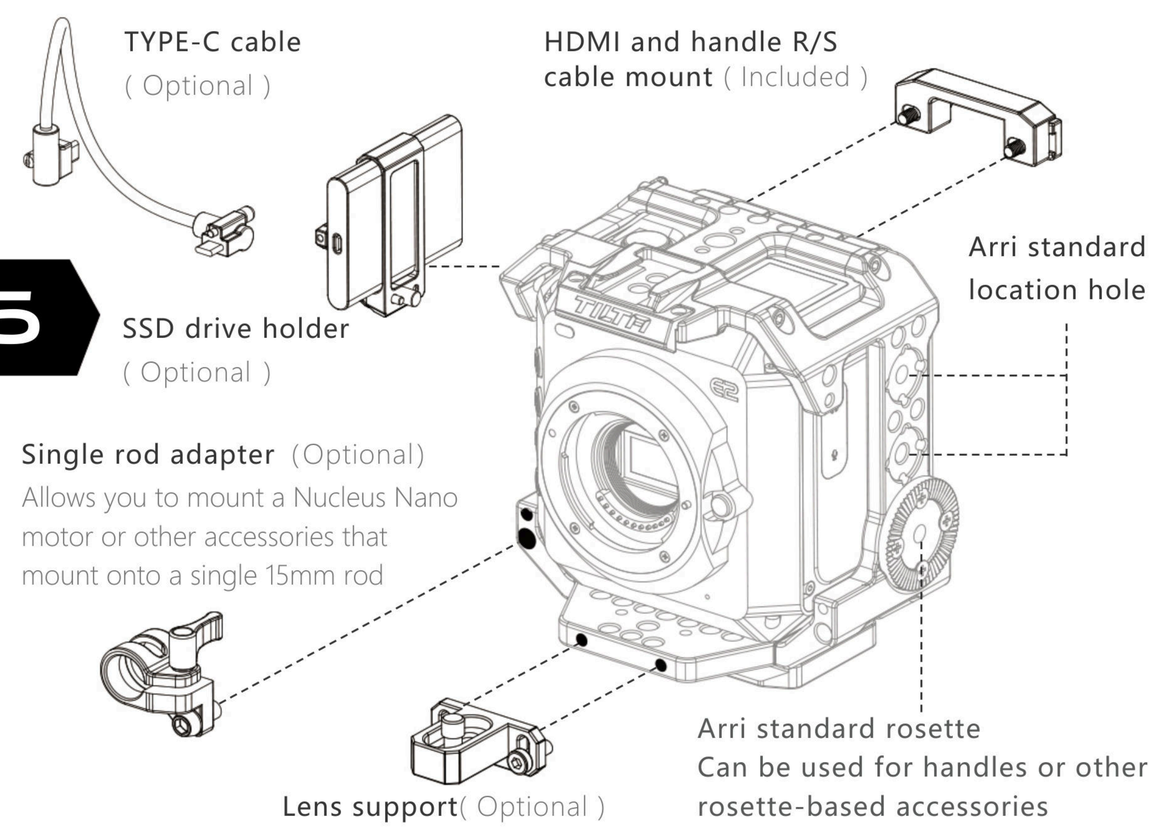

6

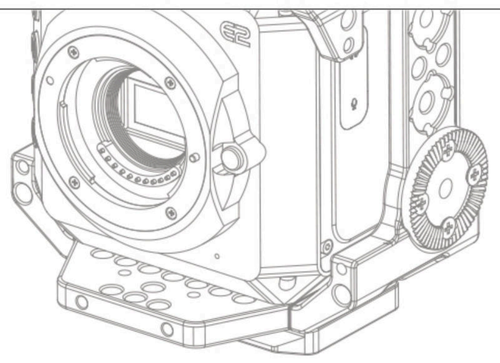

Slide the camera onto the baseplate until the stopper is bounced back, then fasten the lever (Optional)

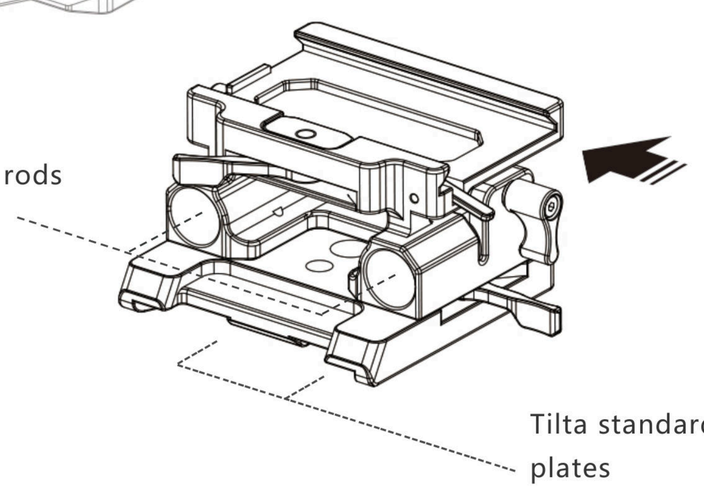

7

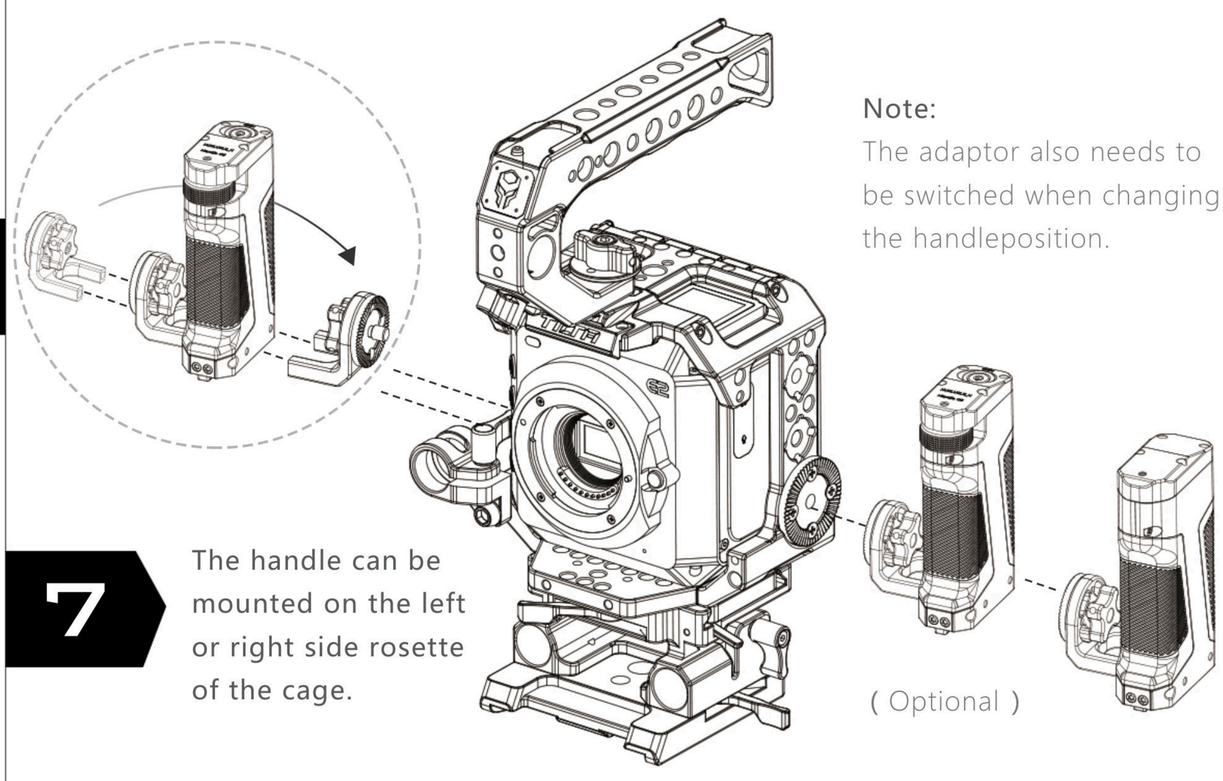

The handle can be mounted on the left or right side rosette of the cage.

Note:
The adaptor also needs to be switched when changing the handleposition.

(Optional)